PRODUCT

JAX LIGHTING SYSTEM
INSTALL GUIDE

DESCRIPTION

JAX IS A MODULAR LIGHT FIXTURE COMPRISED OF INDIVIDUAL PARTS THAT QUICKLY LOCK TOGETHER.

MATERIALS

ANODIZED ALUMINUM
SOLID OPTIC CRYSTAL

NOTES

• THIS IS A GENERAL INSTALL GUIDE AND WILL BE ACCOMPANIED BY A LAYOUT GUIDE WITH DETAILED SPECIFICATIONS FOR YOUR SPECIFIC FIXTURE.

• JAX SHIPS AS SEPARATE COMPONENTS AND IS MEANT TO BE ASSEMBLED ON-SITE.

• JAX SHOULD BE INSTALLED BY A LICENSED INSTALLATION PROFESSIONAL. LEVEL AND PRECISE INSTALLATION IS CRITICAL.

• THIS FIXTURE IS INTENDED TO BE INSTALLED UTILIZING A NEC COMPLIANT JUNCTION BOX, AT LEAST 2IN DEEP, WITHOUT A PLASTER RING.

• AS BUILDING MATERIALS VARY, SCREWS FOR FIXING TO THE CEILING ARE NOT INCLUDED.

• JAX IS DIMMABLE WITH COMPATIBLE TRIAC, 0-10V, AND ELV DIMMING HARDWARE.

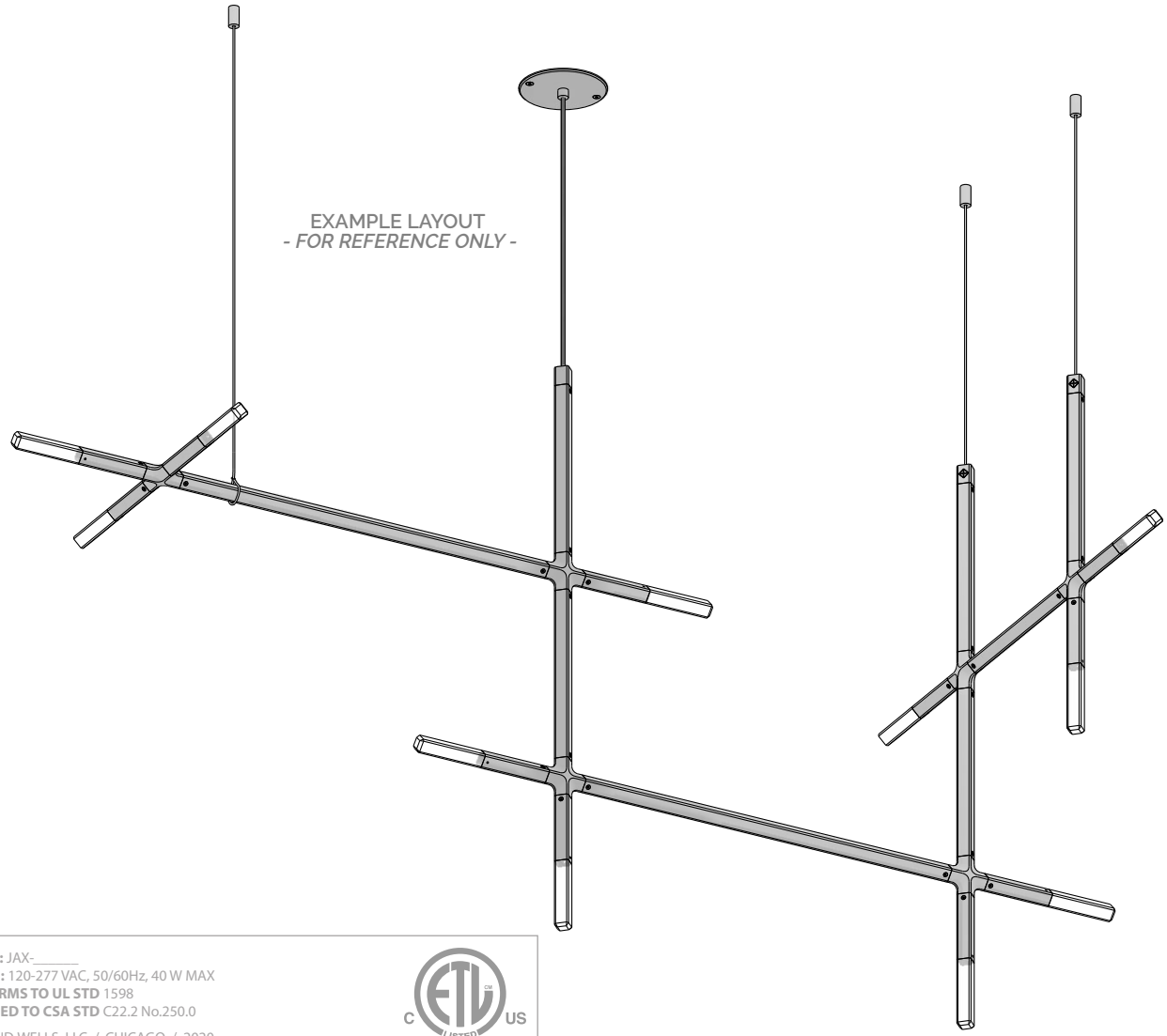

MODEL: JAX-_____
RATING: 120-277 VAC, 50/60Hz, 40 W MAX
CONFORMS TO UL STD 1598
CERTIFIED TO CSA STD C22.2 No.250.0

LAKE AND WELLS, LLC / CHICAGO / 2020
WWW.LAKEANDWELLS.COM

C ETL LISTED US
Intertek
5009608

DRY LOCATIONS ONLY
POUR EMPLACEMENTS SECS SEULEMENT
ASSEMBLE PARTS CONNECTOR AND JAX CRYSTAL ONLY WITH PARTS HUB, T-HUB, L-HUB, CEILING POWER, OR CEILING ANCHOR.
ASSEMBLER LA PIECE CONNECTOR AND JAX CRYSTAL SEULEMENT AVEC LA PIECE HUB, T-HUB, L-HUB, CEILING POWER, OR CEILING ANCHOR.

AMERICAN DESIGN
BY LAKE WELLS
CHICAGO

(REVISED 8/1/21)

© 2020, LAKE AND WELLS, LLC ALL RIGHTS RESERVED PATENT PROTECTED - U.S. PATENT NO. 11,067,256 INFO@LAKEANDWELLS.COM

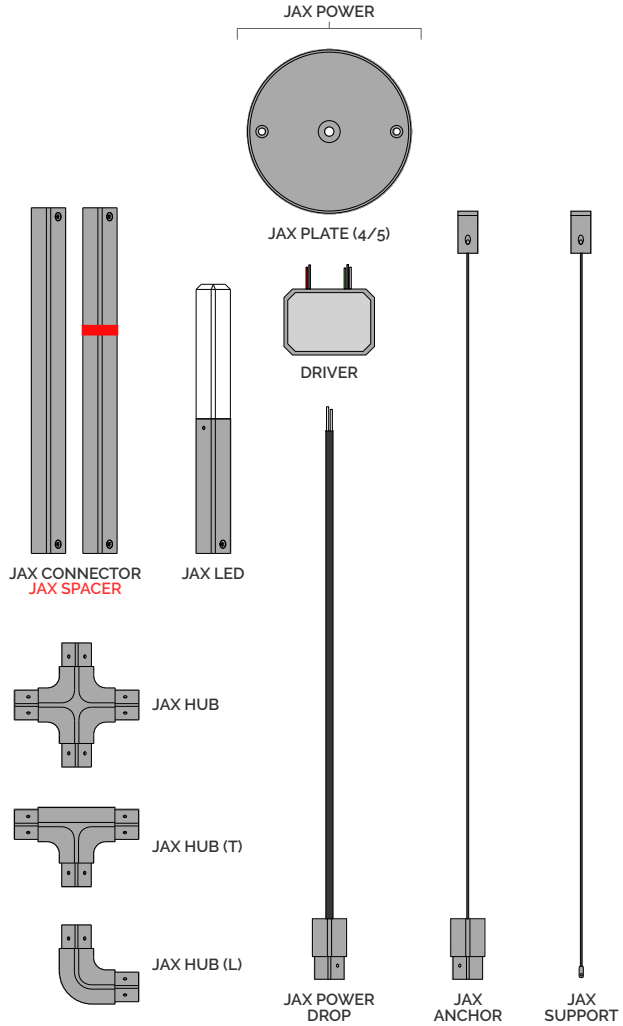

PARTS

• Review and take note of all the components your order came with.

• JAX CONNECTOR components can come in multiple lengths.

• JAX SPACER components look the same as JAX CONNECTOR components except that SPACER components do not have any internal electrical connections. They will also be marked with a red tag. It is important that SPACER components are assembled in the correct location (per the included layout guide).

• Fixtures are built by connecting the male ends of each HUB, POWER, or ANCHOR to the female ends of each CONNECTOR, SPACER, or JAX LED.

• Depending on the specific fixture ordered, some of the components shown above may not be included.

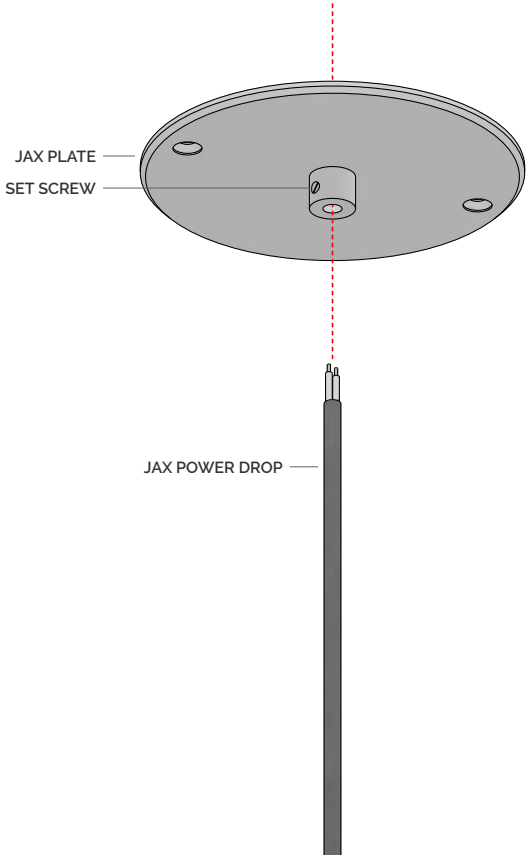

1 POWER CABLE ASSEMBLY

• Loosen (do not remove) the SET SCREW on the JAX PLATE.

• Feed the JAX POWER DROP cord through the JAX PLATE strain relief until desired drop length is achieved.

• When desired drop length is achieved, tighten the SET SCREW to secure the cord in place.

• Leave 3-4in of extra cable and trim any excess.

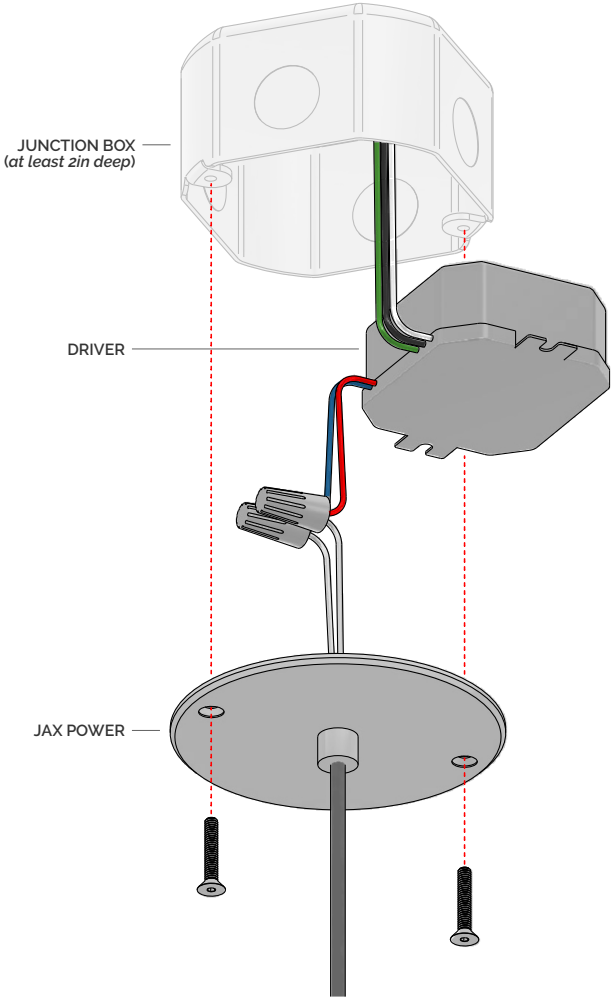

2 CANOPY INSTALLATION

• **BE SURE THAT ALL POWER IS OFF TO THE JUNCTION BOX**

• Connect the red DRIVER wire with one JAX POWER wire.

• Connect the blue DRIVER wire with the other JAX POWER wire.

• Connect the neutral power cord with the white DRIVER wire.

• Connect the hot power cord wire with the black DRIVER wire.

• Depending on your dimming hardware, connect the appropriate DRIVER wires if necessary.

• Ground the green DRIVER wire according to local electrical code.

• Carefully place the DRIVER inside the junction box, fit in all the wires, and securely attach the JAX POWER canopy.

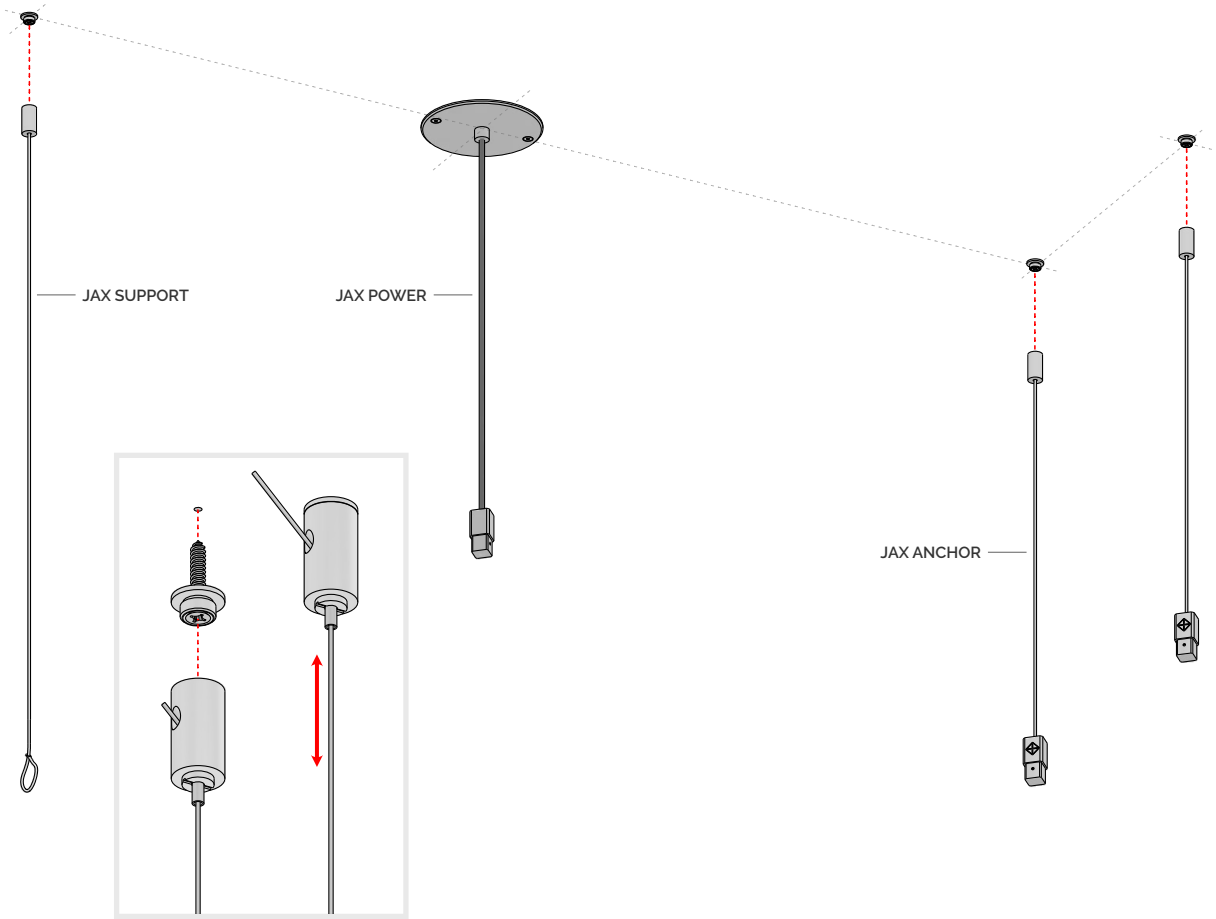

3 INSTALL ALL CEILING CONNECTIONS

• Using the dimensions in the included layout guide as a reference, position and securely install any JAX ANCHOR and/or JAX SUPPORT components into the ceiling. Use hardware appropriate for your ceiling material (not included). Hardware should be secure enough to hold the full weight of the fixture.

• Match any JAX ANCHOR cable drop length to the JAX POWER cord (unless otherwise noted in the layout guide).

• Because ceilings aren't always completely level, it is recommended to use a laser level to ensure all hanging JAX ANCHOR and JAX POWER components are hanging level.

• For any JAX SUPPORT components, create a loop with the cable and leave hanging at any drop length. Final drop length will be adjusted in step 5.

• Wait until the installation is complete before cutting away any excess cable.

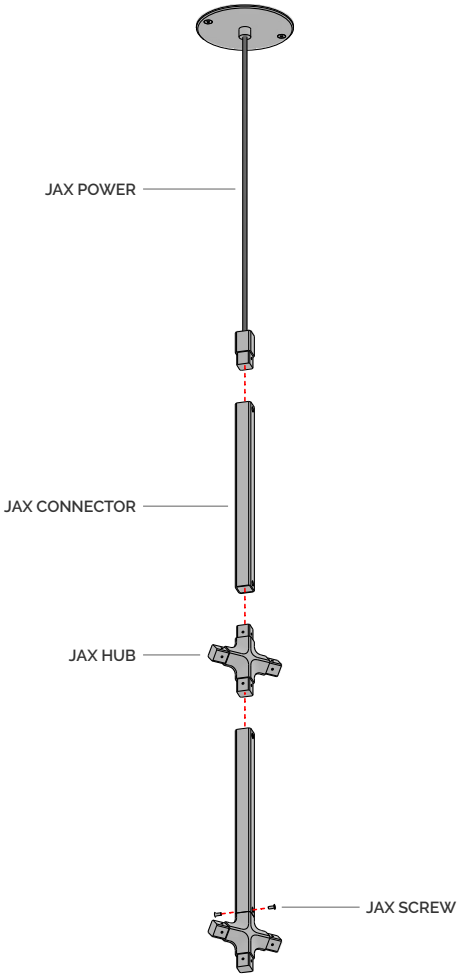

4 START FRAME ASSEMBLY

• Using the included layout guide as a reference, begin to build the fixture frame by attaching the first few components and securing them with the included JAX SCREWS. Only use CONNECTOR and HUB components.

• No JAX LED components will be used at this time.

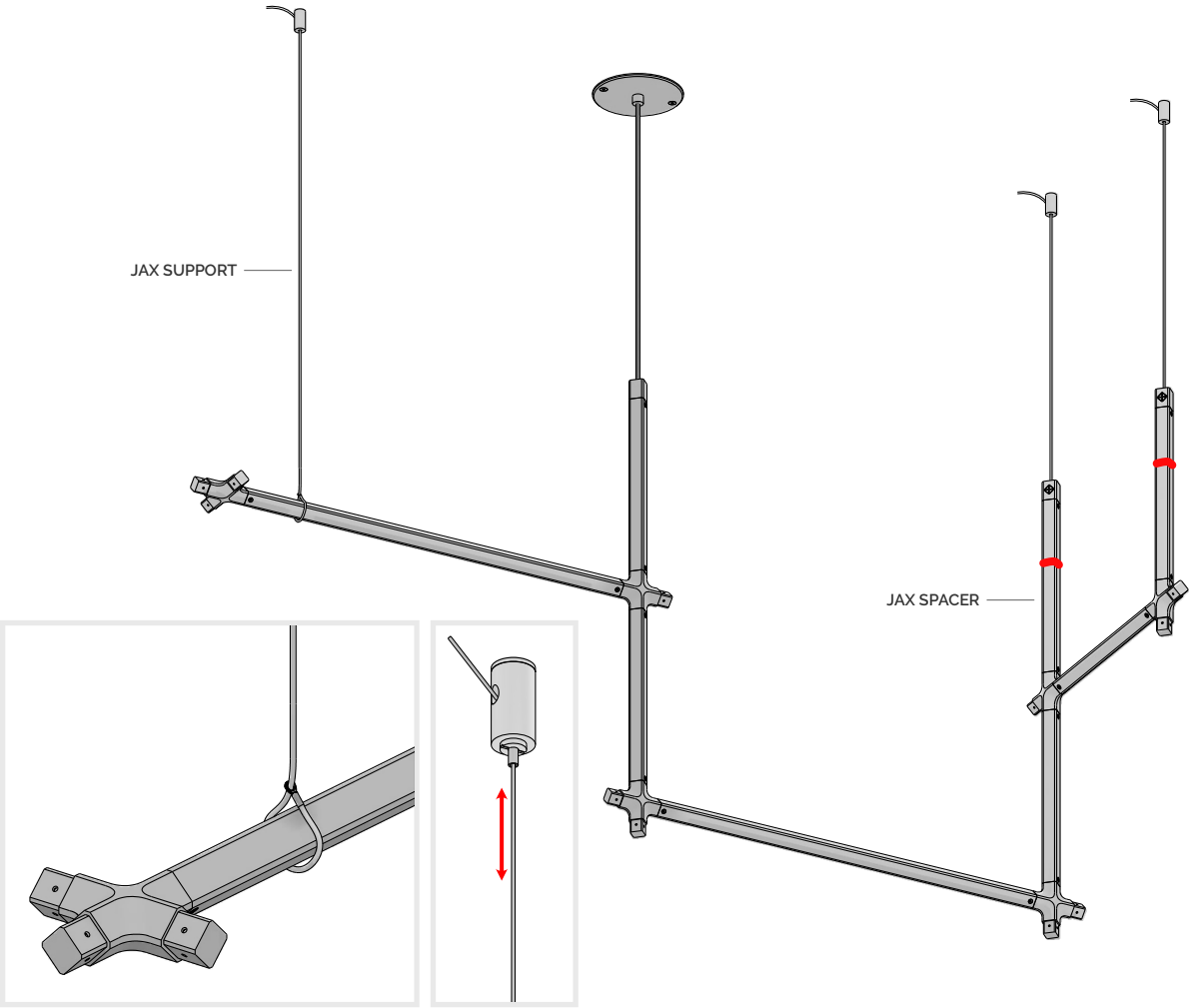

5 COMPLETE AND ADJUST FRAME ASSEMBLY

• Continue building out the fixture frame according to the included layout guide.

• Sometimes it is helpful to pre-build sections of the frame before attaching them.

• It is important that all JAX SPACER components are used in the correct location. All JAX SPACER parts will be clearly marked with a red tag, but can also be identified by a lack of interior wiring.

• Attach and adjust any JAX SUPPORT components so that the frame is level.

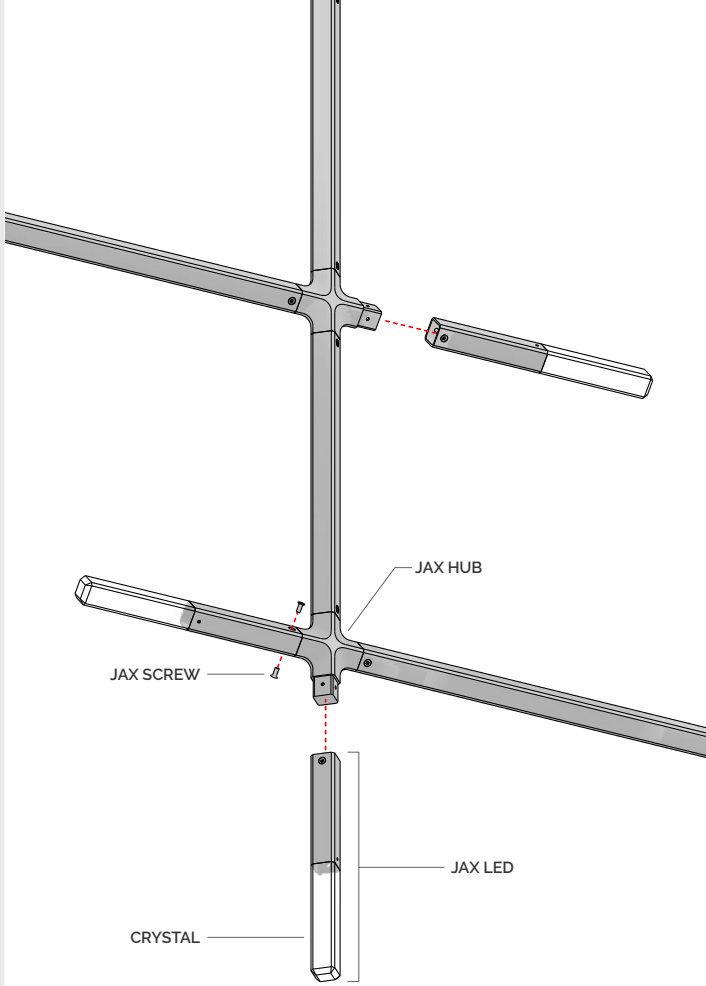

6 ATTACH ALL CRYSTAL LEDS

• Carefully attach each JAX LED to any exposed HUB ends using the included JAX SCREWS.

• **DO NOT HOLD OR APPLY PRESSURE TO ANY CRYSTALS.**

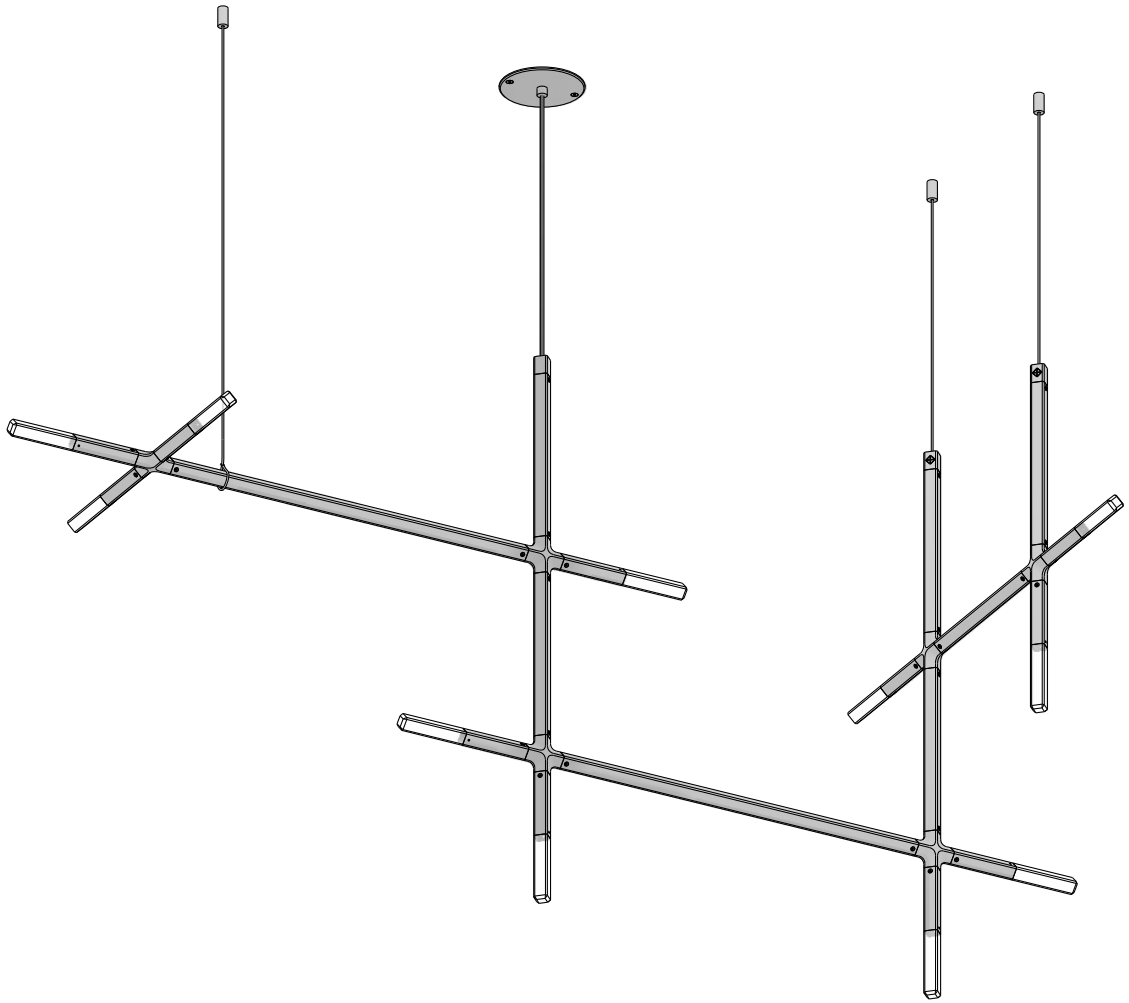

7 FINAL FIXTURE REVIEW AND ADJUSTMENT

• Review the fixture to make sure everything is balanced and secured.

• Extra JAX SUPPORT components may be included and can be used for any sections that sag or look unbalanced.

• If no adjustments are needed, clean off any fingerprints or debris, trim excess ANCHOR and SUPPORT cables, and remove SPACER red tags.

• Turn on main power.

MAINTENANCE

FLICKERING OR UNLIT LEDS
Jax is a precision engineered fixture comprised of many small and precise electrical connections. If a JAX LED is flickering (or unlit), it may be possible that a connection needs to be adjusted. Starting with the affected JAX LED, loosen, adjust, rotate, and re-tighten the connection of each part until the led stays lit. Also, be sure that any SPACER components are installed in the correct locations.

BALANCE
If the installation does not hang straight, review and adjust the cable drop lengths for each ANCHOR and SUPPORT. If the installation sags in places or looks unbalanced, additional SUPPORT components may be added to the affected section.

CLEANING
Crystals can be cleaned by wiping with a soft damp cloth or glass cleaner with no additives. Only use fine cotton or extra soft cloths. Do not apply too much pressure to any crystals. Aluminum can be cleaned by using a dry or slightly dampened cloth.