PRODUCT

JAX LIGHTING SYSTEM
INSTALL GUIDE

DESCRIPTION

JAX IS A MODULAR LIGHT FIXTURE COMPRISED OF INDIVIDUAL PARTS THAT QUICKLY LOCK TOGETHER.

MATERIALS

ANODIZED ALUMINUM
SOLID OPTIC CRYSTAL

NOTES

• THIS IS A GENERAL INSTALL GUIDE AND WILL BE ACCOMPANIED BY A LAYOUT GUIDE WITH DETAILED SPECIFICATIONS FOR YOUR SPECIFIC FIXTURE.

• JAX SHIPS AS SEPARATE COMPONENTS AND IS MEANT TO BE ASSEMBLED ON-SITE.

• JAX SHOULD BE INSTALLED BY A LICENSED INSTALLATION PROFESSIONAL. LEVEL AND PRECISE INSTALLATION IS CRITICAL.

• THIS FIXTURE IS INTENDED TO BE INSTALLED UTILIZING A NEC COMPLIANT JUNCTION BOX, AT LEAST 2IN DEEP, WITHOUT A PLASTER RING.

• AS BUILDING MATERIALS VARY, SCREWS FOR FIXING TO THE WALL OR CEILING ARE NOT INCLUDED.

• JAX IS DIMMABLE WITH COMPATIBLE TRIAC, 0-10V, AND ELV DIMMING HARDWARE.

AMERICAN DESIGN
BY LAKE WELLS
CHICAGO

EXAMPLE LAYOUT
- FOR REFERENCE ONLY -

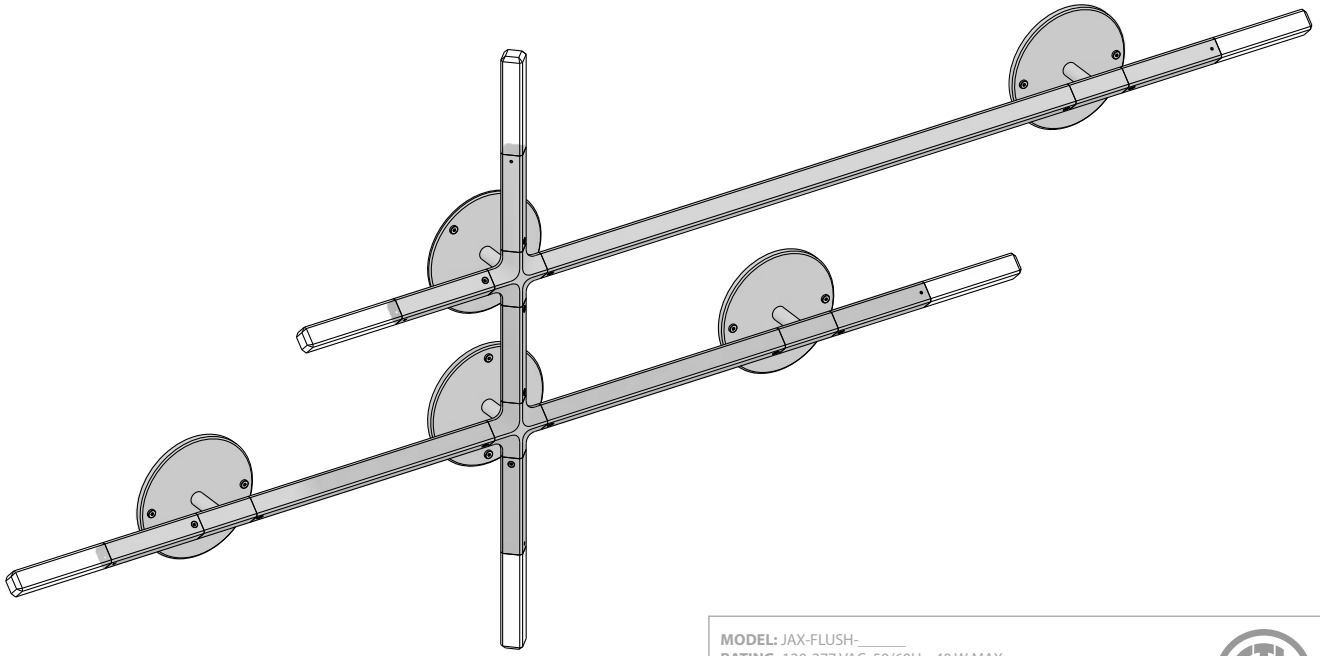

MODEL: JAX-FLUSH-_____
RATING: 120-277 VAC, 50/60Hz, 40 W MAX
CONFORMS TO UL STD 1598
CERTIFIED TO CSA STD C22.2 No.250.0

LAKE AND WELLS, LLC / CHICAGO / 2020
WWW.LAKEANDWELLS.COM

C ETL LISTED US
Intertek
5009608

DRY LOCATIONS ONLY
POUR EMPLACEMENTS SECS SEULEMENT ASSEMBLE PARTS CONNECTOR AND JAX CRYSTAL ONLY WITH PARTS HUB, T-HUB, L-HUB, CEILING POWER, OR CEILING ANCHOR. ASSEMBLER LA PIECE CONNECTOR AND JAX CRYSTAL SEULEMENT AVEC LA PIECE HUB, T-HUB, L-HUB, CEILING POWER, OR CEILING ANCHOR.

(REVISED 8/1/21)

© 2020, LAKE AND WELLS, LLC ALL RIGHTS RESERVED PATENT PROTECTED - U.S. PATENT NO. 11,067,256 INFO@LAKEANDWELLS.COM

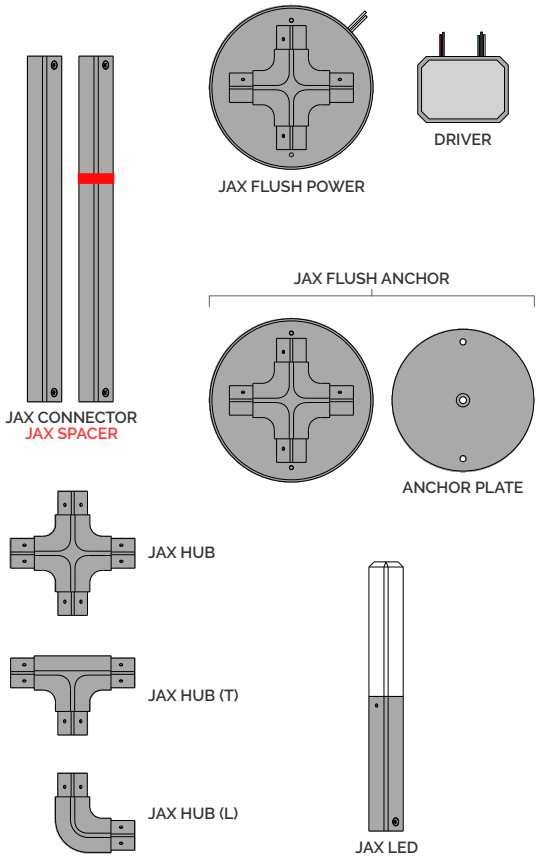

PARTS

• Review and take note of all the components your order came with.

• JAX CONNECTOR components may come in multiple lengths.

• JAX SPACER components are marked with a red tag and do not have internal electrical connections. If included, it is important that SPACER components are assembled in the correct location (per the included layout guide).

• **NOT ALL COMPONENTS SHOWN WILL BE INCLUDED AND SOME PARTS MAY ALREADY BE PRE-ASSEMBLED.**

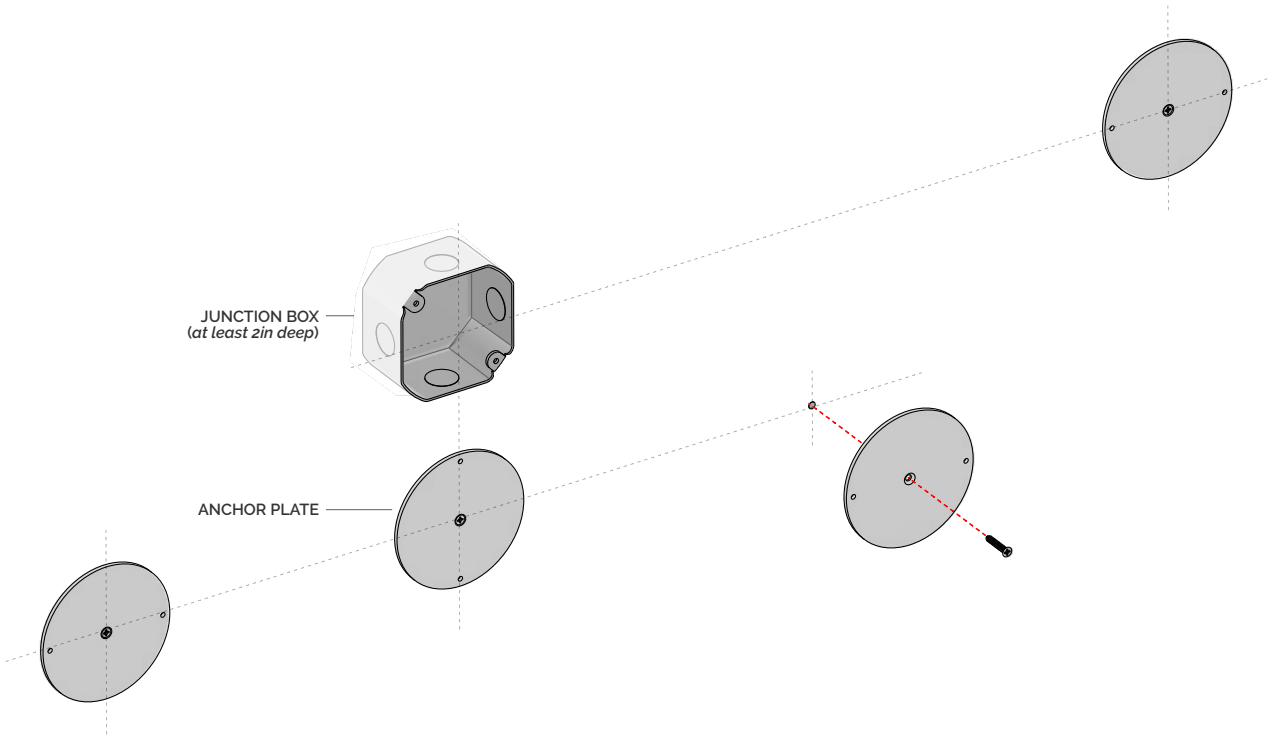

1 INSTALL ANCHOR PLATES

• If your fixture does not include JAX FLUSH ANCHOR components, skip to STEP 2

• Using the dimensions in the included layout guide as a reference, mark the center location of each ANCHOR PLATE. It's important to precisely measure each location from the center of the JUNCTION BOX.

• Securely install any ANCHOR PLATE components to the wall or ceiling using hardware appropriate for your surface material (not included). Hardware should be secure enough to hold the full weight of the fixture and should be flush with the surface of the plate.

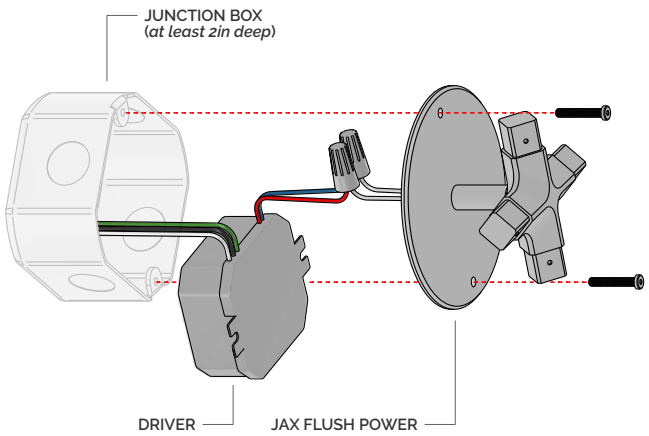

2 INSTALL CANOPY

- **BE SURE THAT ALL POWER IS OFF TO THE JUNCTION BOX**
- Connect the red DRIVER wire with one JAX POWER wire.
- Connect the blue DRIVER wire with the other JAX POWER wire.
- Connect the neutral power cord with the white DRIVER wire.
- Connect the hot power cord wire with the black DRIVER wire.
- Depending on your dimming hardware, connect the appropriate DRIVER wires if necessary.
- Ground the green DRIVER wire according to local electrical code.
- Carefully place the DRIVER inside the junction box, fit in all the wires, and securely attach the JAX FLUSH POWER canopy.

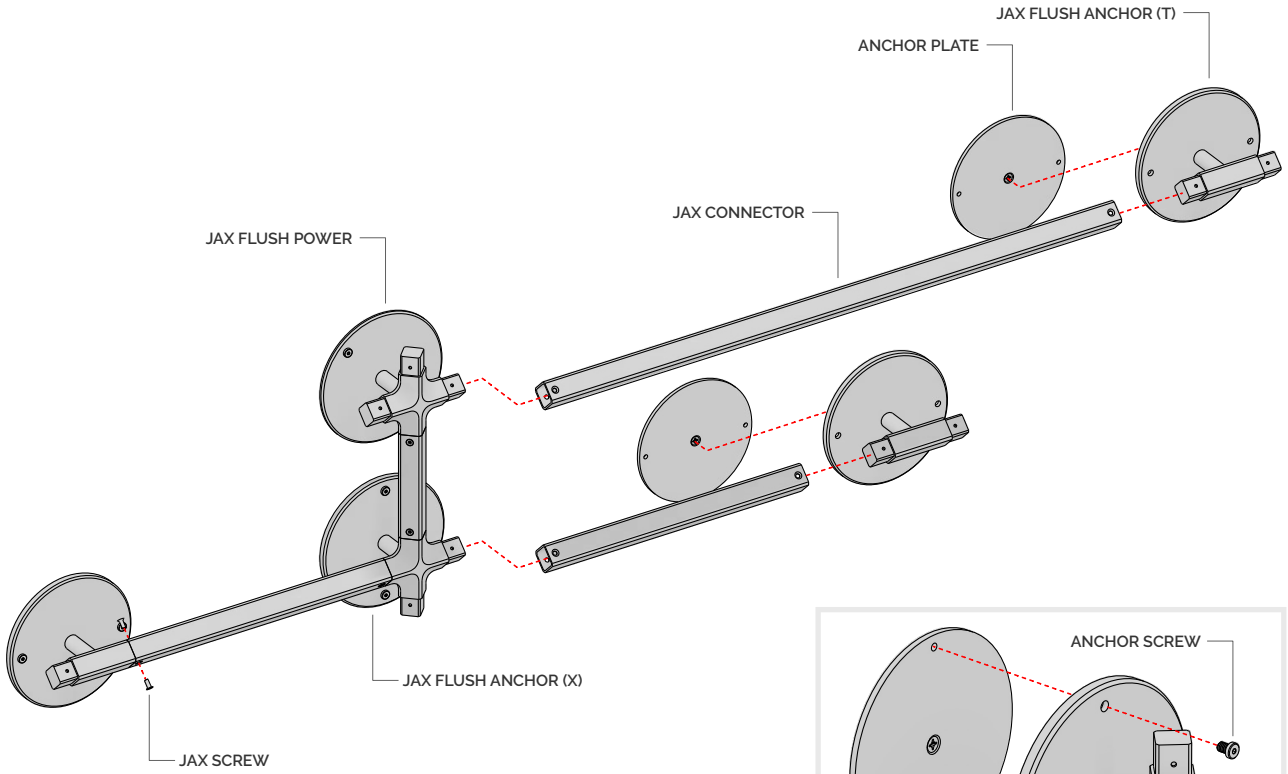

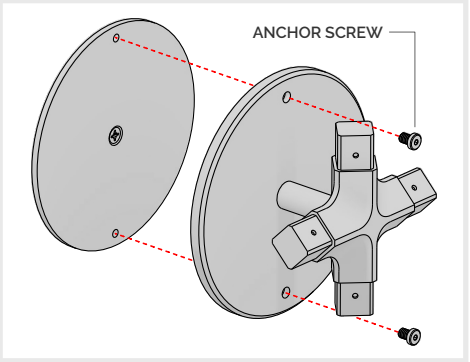

3 ASSEMBLE FRAME

- Using the included layout guide as a reference, build the fixture frame by attaching JAX CONNECTOR components and securing them with JAX SCREWS.
- Attach JAX ANCHOR components to each ANCHOR PLATE using ANCHOR SCREWS. Leave these screws loose as minor adjustments may need to be made during assembly.
- Sometimes it is helpful to pre-build sections of the frame before attaching.

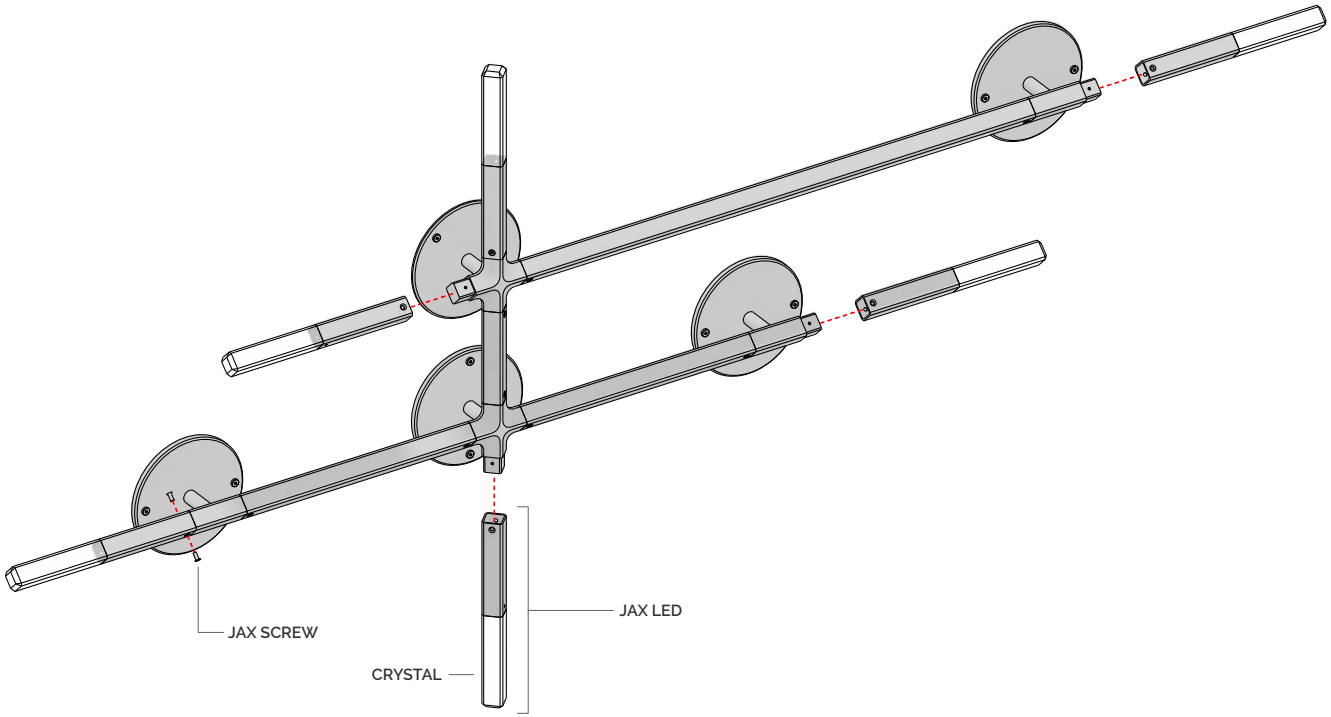

4 ATTACH CRYSTAL LEDS

• Carefully attach each JAX LED to any exposed HUB ends using the included JAX SCREWS.

• **DO NOT HOLD OR APPLY PRESSURE TO ANY CRYSTALS.**

MAINTENANCE

FLICKERING OR UNLIT LEDS

Jax is a precision engineered fixture comprised of many small and precise electrical connections. If a JAX LED is flickering (or unlit), it may be possible that a connection needs to be adjusted. Starting with the affected JAX LED, loosen, adjust, rotate, and re-tighten the connection of each part until the led stays lit. Also, be sure that any SPACER components are installed in the correct locations.

CLEANING

Crystals can be cleaned by wiping with a soft damp cloth or glass cleaner with no additives. Only use fine cotton or extra soft cloths. Do not apply too much pressure to any crystals. Aluminum can be cleaned by using a dry or slightly dampened cloth.