REVISED 9/12/18

AMERICAN DESIGN
BY LAKE WELLS
CHICAGO

PRODUCT

JAX CHANDELIER
JAX 03-002

MATERIALS (*FINISHES*)

ANODIZED ALUMINUM (*AGED BRONZE, GOLDEN BRONZE, BLACK, SILVER*)

SOLID OPTIC CRYSTAL (*CLEAR, FROSTED, SMOKE*)

WEIGHT

2.6 LBS

LAMPING

INTEGRATED LED (QTY 3)
1.3W, 3000K
ELV AND PHASE DIMMABLE

CERTIFICATIONS

ETL LISTED (120V)

NOTES

JAX IS COMPRISED OF MODULAR COMPONENTS AND IS MEANT TO BE ASSEMBLED ON-SITE BY A QUALIFIED ELECTRICIAN AND INSTALLATION PROFESSIONAL.

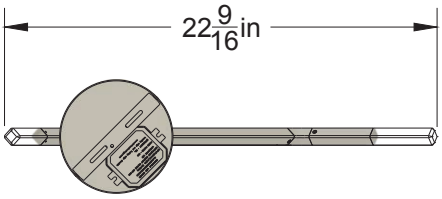

TOP VIEW

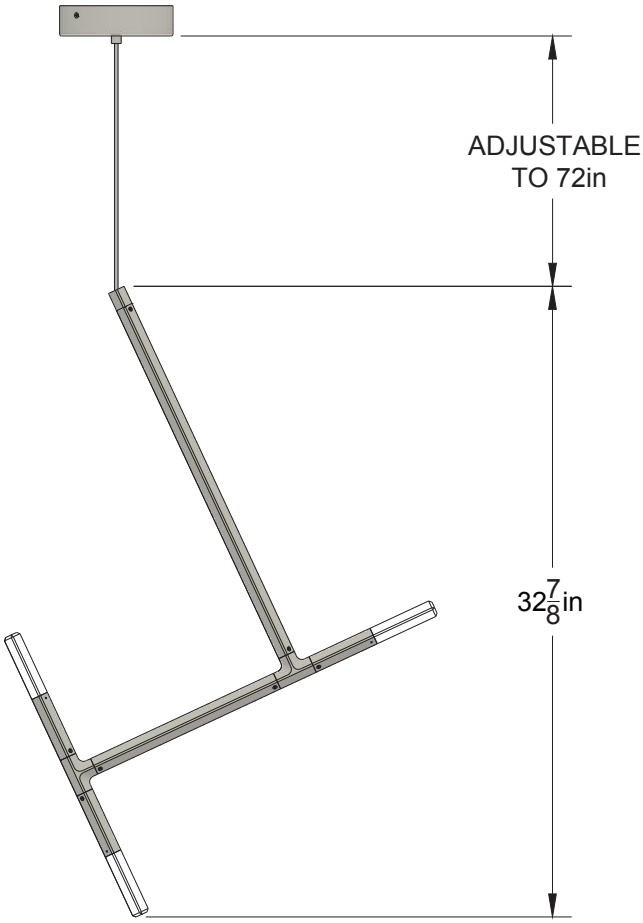

FRONT VIEW

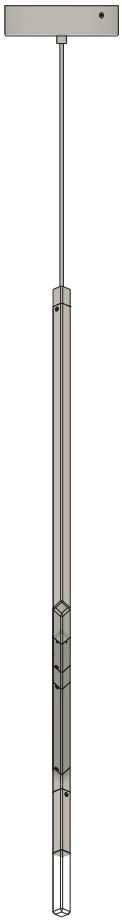

SIDE VIEW

© 2018, LAKE AND WELLS, LLC ALL RIGHTS RESERVED

AMERICAN DESIGN
BY LAKE WELLS
CHICAGO

LAKE + WELLS | PO BOX 10305 | CHICAGO, IL 60610
LAKEANDWELLS.COM | (312) 380-9498 | INFO@LAKEANDWELLS.COM